Introduction to Class-D Audio Amplifiers

Knott Arnold, aknott@harmanbecker.com

2007-01-12

Contents

Abstract

Several industries in the audio business have a strong demand on perfect sound reproduction. Independent of portable, home or automotive applications, many amplifier designs use the way of switching amplifiers (Class-D amplifiers) to achieve this goal. The origins of the requirements on an amplifier are shown as introduction. The description of a common block diagram is followed by explanations of various possible realizations of all blocks. A second part shows chosen specific problems related to noise and distortion concluding with a summary.

1 Introduction

Among others Class-D is a common used technology to amplify audio signals from the operating voltage level of digital signal processors, digital to analog converters or line receivers to a higher voltage level for driving transducers. Due to the transducers low efficiency (often below 3 %), the output of the amplifier needs to provide a high power level to enable the whole system to generate a high sound pressure level. In different applications for portable, home entertainment and car entertainment an optimum of output voltage, current and transducer impedance for the system needs to be found for the achievable power level. Table 1 shows various sound power level and the therefore required electrical output power of the amplifier as well as some typical sounds at these levels.

Table 1 Electrical compared to sound power levels (speaker efficiency assumed to be 3 %) [1]

typical sound	P_{sound}	P_{elec}
refrigerator (background noise)	0.1 µW	3.3 µW
talking (moderate music level)	10 µW	0.3 mW
playing kids (typical listening level)	1 mW	33 mW
trumpet (high listening level)	0.3 W	10 W
concert (very high listenining level at long distance)	100 W	3.3 kW

Despite the power levels, also the precission of the output signal is of very high interest due to the very high sensibility of the human ear, being the most sensibel organ of the human body. However the output signal of an amplifier can never be better than its signal source. Requirements on the noise levels depend on the distance between speaker and the listeners position. In recent high end audio systems for home and automotive use the SNR of the system is expected to be 110 dB. Deviations of the output signal from the input signal are required to cause less than 0.01 % distortion.
Another very important criteria for audio amplifier design is the signal output frequency, which is derived from the frequency range in which the human ear acts on stimuli: between 20 Hz and 20 kHz.
Different industries use different ways for amplifying the audio signal to these demands, where one way of amplification is switching amplifiers (also called

Class-D amplifiers) which belong to the family of power electronics circuitries. A block diagram of these amplifiers is shown in 1.

Figure 1 Input

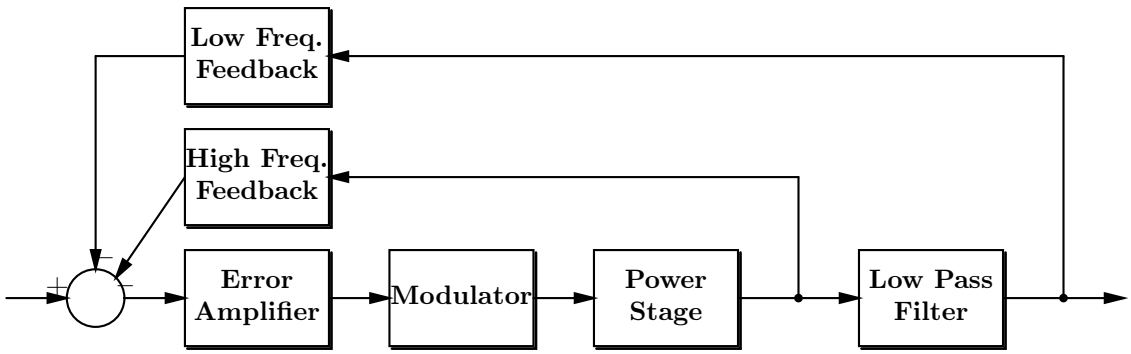

Section 2 describes the blocks of figure 1 and shows various possibilities to realize each of them as well as chossen problems which need to be considered in a switching amplifier design. Section 3 concludes with a summary.

2 Realization

2.1 Error Amplifier

2.1.1 Digital

Digital controllers for amplifiers usually intrinsically contain also the modulator. As the power stage requires a one bit stream (i.e pulse width modulated streams or delta sigma coding), all information needs to be coded sequentially. The amount of information is given by the signal to noise ratio (SNR) required for the overall system and the highest audio frequency, where both of those parameters therefore adjust the highest required resolution equally to the required sampling frequency of a microcontroller or digital signal processor (DSP). Figure 2 shows a principle waveform of a capable bit stream for Class-D amplifiers, where $\Delta t = t_1 - t_2$ is a quantization interval, $T_{bit-stream}$ is the period of the switching frequency, and T_{audio} is the inverse of the highest occuring audio frequency. The sampling theorem requires both periods to fullfill equation 2.1.

Equation 2.1 Sampling theorem

$$T_{bit-stream} \leq \frac{T_{audio}}{2}$$

Figure 2

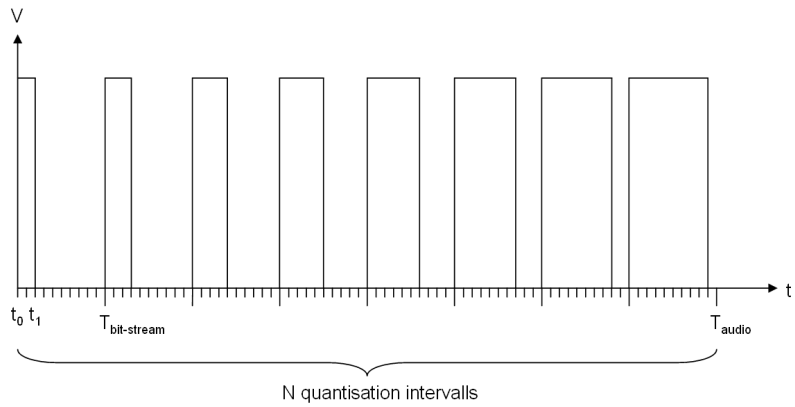

As described in section 1 a commly expected SNR is 110 dB. To keep the performance of the signal the bit stream needs to be based on more than 18 *bit* as calculated in equation 2.2

Equation 2.2 Number of required coding bits

$$N = \log_2\left(10^{\frac{110}{20}}\right) \approx 18.3\ bit$$

The highest human audible frequency is 20 kHz, what determines the length of one intervall to

Equation 2.3 Sampling period

$$\Delta t = \frac{1}{2^{19} \cdot 20\ \text{kHz}} \approx 95.4\ \text{ps}$$

and a processing frequency of f_{DSP} as shown in equation 2.4.

Equation 2.4 DSP output frequency

$$f_{DSP} = \frac{1}{\Delta t} \approx 10.5\ \text{GHz}$$

As those speeds are not reachable with controllers known in the art, other techniques like noise shapping or analog correction of the digitally introduced error with PEDEC [2] and [3].
Typical noise shaping transfer functions are shown in figure 3.

Figure 3 Magnitudes of different NTFs

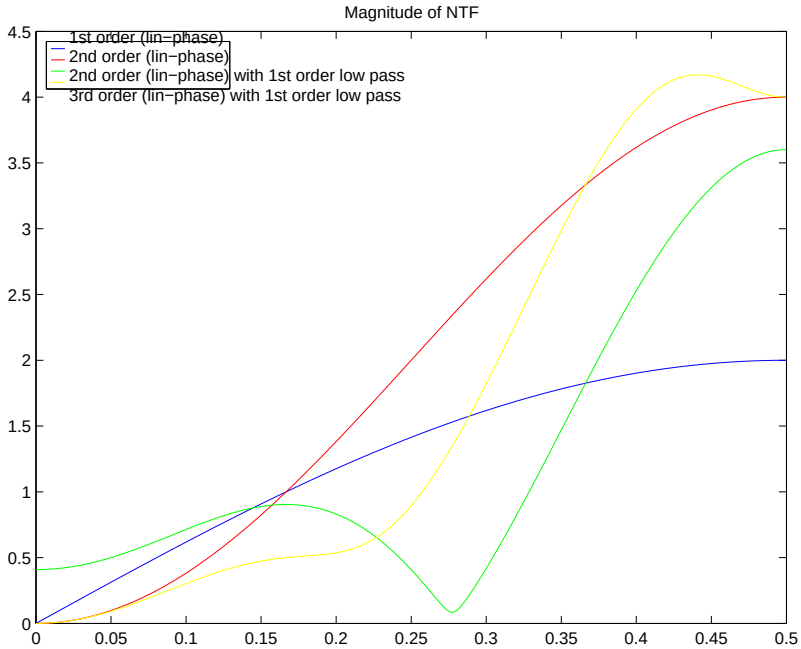

Noise shaping transfers noise from the signal band of interest (here the lower freqencies) to signal frequencies where higher noise is not relevant.

2.1.2 Analog

A typical analog error amplifier is a PI controller as shown in figure 4 with its transfer function 2.5. In some cases further poles and for stability reasons zeros are introduced.

Figure 4 Analog error amplifier: PI controller

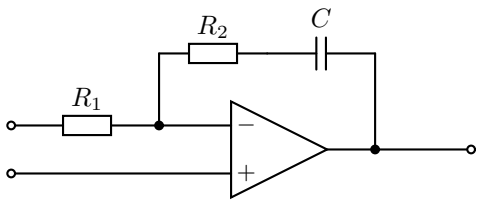

Equation 2.5 Transfer function PI controller

$$\underline{H}(\underline{s}) = \frac{R_2}{R_1} + \frac{1}{\underline{s}R_1C}$$

Similar to the digital error amplifier the signal to noise performance is determined by the performance of the error amplifier.
A typical output voltage into a 4 Ω speaker impedance is 30 V (gives an output power of 225 W). To reach the SNR of 110 dB as stated above, the output noise is allowed to be no higher than approximatly 95 µV as calculated in equation 2.6.

Equation 2.6 Amplifier output noise

$$N_{out} = \frac{S_{out}}{10^{\frac{110}{20}}} \approx 95\ \mu\text{V}$$

where S_{out} is the output voltage of the amplifier and G the gain of the output stage.
For an RMS output voltage of 30 V the supply voltage in balanced output stages is typically about 60 V and in single ended output stages about twice this voltage, while the error amplifier is typically supplied with 5 V. The ratio of those supply voltages is the gain of the output stage G, given by equation 2.7 in this example.

Equation 2.7 Gain output stage

$$G = \frac{V_{supply_{power-stage}}}{V_{supply_{error-amplifier}}} = 12$$

The noise floor of the error amplifier N_{ea} is multiplied by the gain in the power stage so it needs to be at a level as shown in equation 2.8

Equation 2.8 Error amplifier noise

$$N_{ea} = \frac{S_{out}}{G} \approx 8\ \mu\text{V}$$

According to 2.8 the error amplifier needs to have a noise floor below 8 µV or 55 nV/$\sqrt{\text{Hz}}$ in the audio band.
Most critical is the frequency range from 1..4 kHz, because the human hearing is most sensitive there.

2.2 Modulator

The different versions of modulators have in common, that they code the audio signal information into the width of pulses. Therefore not only the modulators but also the amplifiers are frequently called PWM amplifiers.

2.2.1 Self Oscillating

The distance of the pulses generated by a self oscillating modulator varies with input level and therefore the output does not have a fundamental switching but a varying frequency dependend on the frequency of the stability boarder of the whole amplifier.
There are various methods of forcing a whole amplifier system to switch on its on without an external clock applied. One is to introduce a phase delay into the loop by putting poles into the chain to create a conditionally stable system. The switching frequency is determined by the 0 dB gain crossing of the transfer function of the system. A block diagram of such an amplifier is shown in figure 5.

Figure 5 Phase shift controlled oscillating modulator [4]

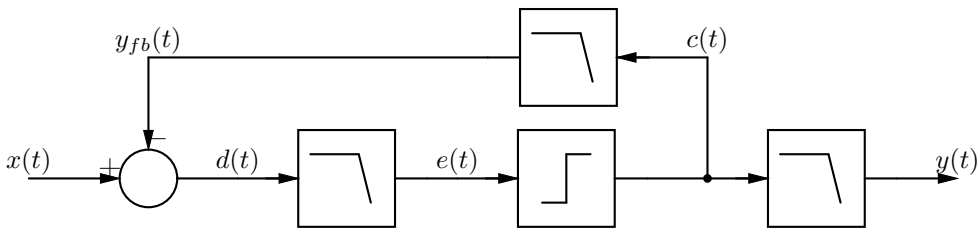

Another way to make an amplifier self oscillate is to feed enough high frequency signals from the output (ripple signal) inverted into an hysteretic comparator to change its decission points by its own amplified outputs. The block diagram is shown in figure 6. Compared to a phase shift controlled self oscillating modulator, its frequency varies in a wider range.

Figure 6 Hysteretic controlled oscillating modulator [5] and [6]

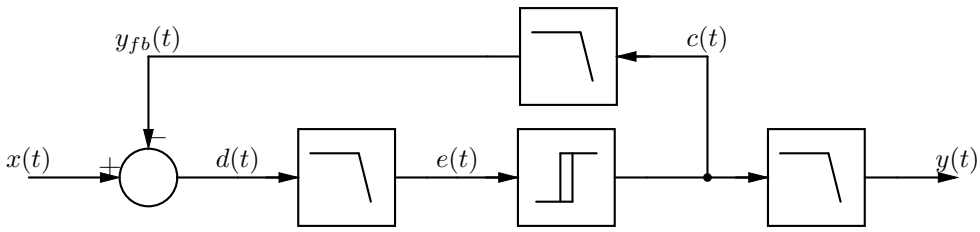

2.2.2 Sigma-Delta

Sigma delta modulators have a topological commonality with most digital to analog converters as well as analog to digital converters in the art. Figure 7 shows a block diagram of such a topology.

Figure 7 Sigma delta modulator

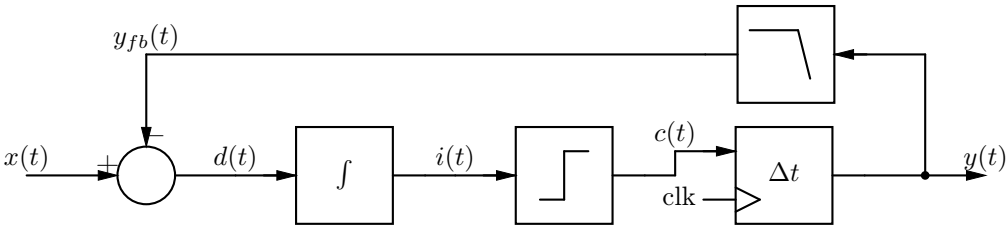

The first two diagrams of figure 8 show an inphase and a quadrature channel of an interleaved sigma delta modulator, where the audio frequency is unified to one and the clock frequency of the latch is chosen to be 1000 Hz. Each of those signals could serve for a power stage without the other one, not profiting from the interleave mode then. The bottom diagram of the same figure shows their superposition.

Figure 8 Sigma Delta modulator interleave of 2

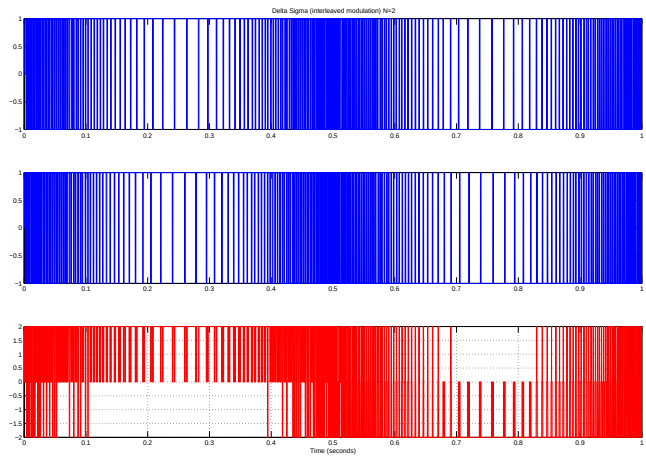

The corresponding spectrum to the interleaved signal is shown in figure 9, which contains reduced high frequency energy than both of the delta sigma streams considered separatly.

Figure 9 Spectrum of Sigma Delta modulator interleave of 2

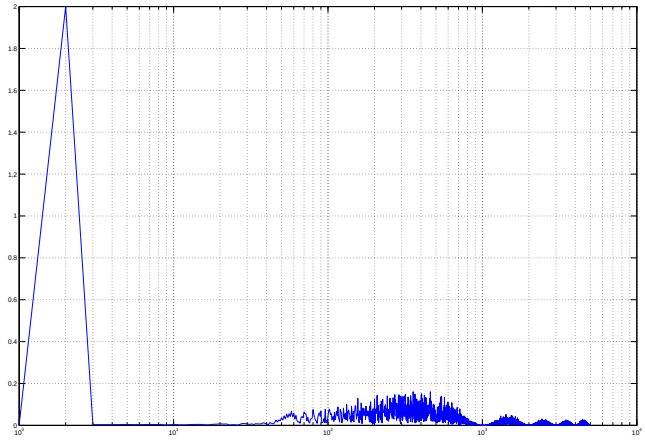

Sigma delta modulators are primarly used in systems with digital inputs as they are capable of including further feedback additionally to there intrinsic feedback what is a basic requirement for an error amplifier in the digital domain and they can be implemented with noise shapping very simple. Their drawbacks are excessive high frequency levels which contradict hard with electromagnetic compatibility (EMC) requirements and they need an additional clock generator.

2.2.3 Fixed Frequency

A fixed frequency modulator derives at least one reference signal from a stable clock source, prefered a crystal oscillator. As shown in figure 10 an integrator forms a precise sawtooth or triangle signal which is fed into a comparator, where it is compared with the output of an analog error amplifier. The result is a PWM stream.

Figure 10 Fixed frequency modulator

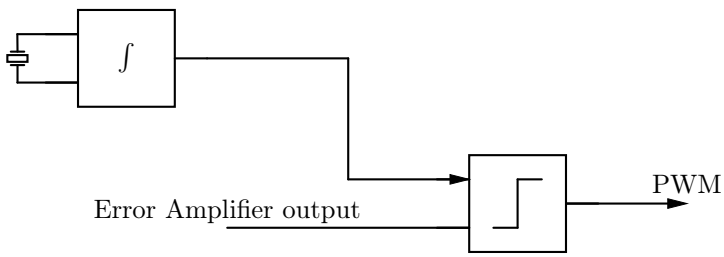

A sawtooth carrier always generates single side modulated (where either of the edges can be modulated depending on the position of the slower edge of

the sawtooth) while a triangle carrier leads to a double sided modulation (an overview is given in [7]). Using multiple carriers, the PWM streams can be overlayed with multiple power stages and therefore canceling undesired high frequency energy. The upper two diagrams in figure 11 show to PWM streams each generated by a triangle based fixed frequency modulator and the bottom diagram shows its overlay.

Figure 11 Interleave of 2

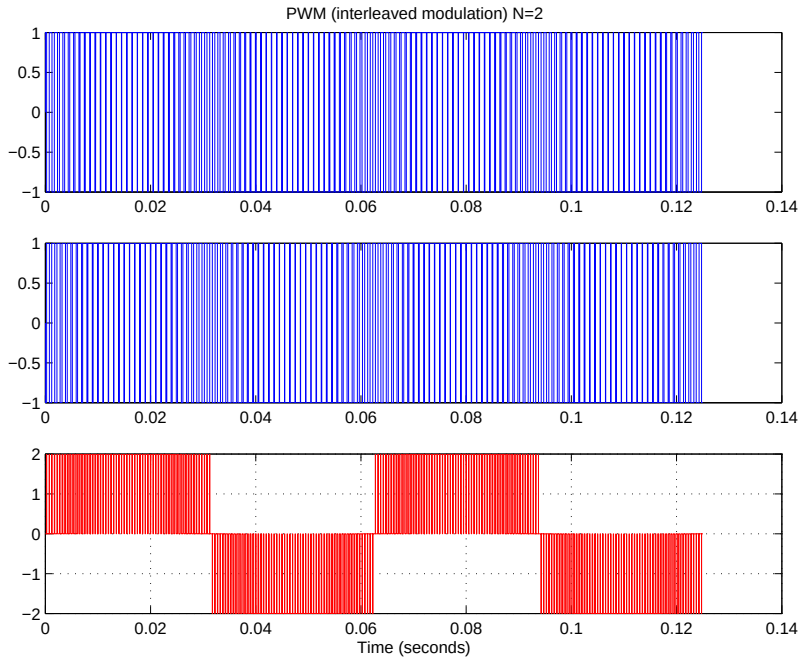

Figure 12 shows the same for four independently calculated PWM streams and again their superposition.

Figure 12 Interleave of 4

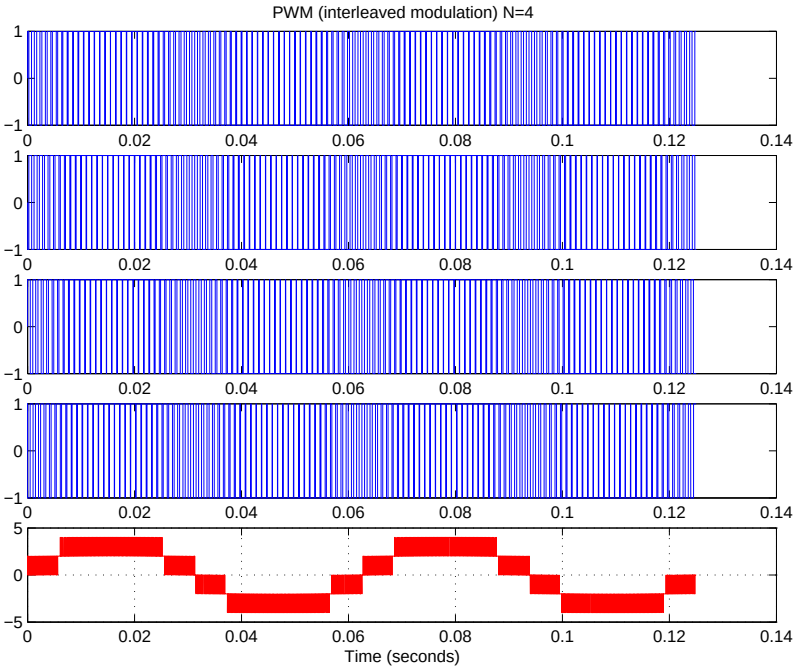

The advantages of this topology can be seen when looking at the spectrum of those two resulting waveforms in figures 13 and 14. Note that the audio frequency is unified to one and the switching frequency is 1 kHz. The spectral components which are odd harmonics as well as the fundamental are canceled in the so called case of interleave of two.

Figure 13 Spectrum of interleave by 2

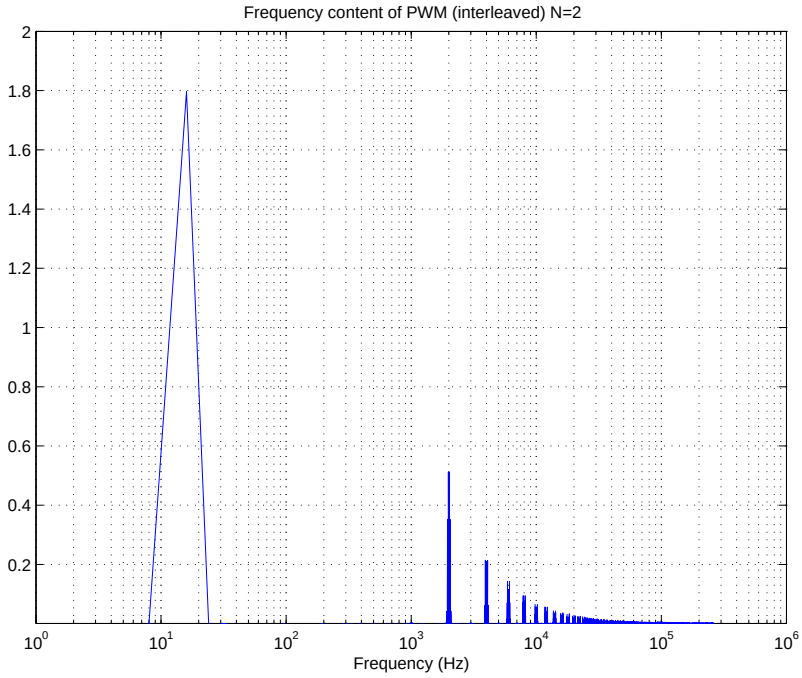

In case of higher interleave counts like shown in figure 14, only every fourth harmonic remains in the spectrum:

Figure 14 Spectrum of interleave by 4

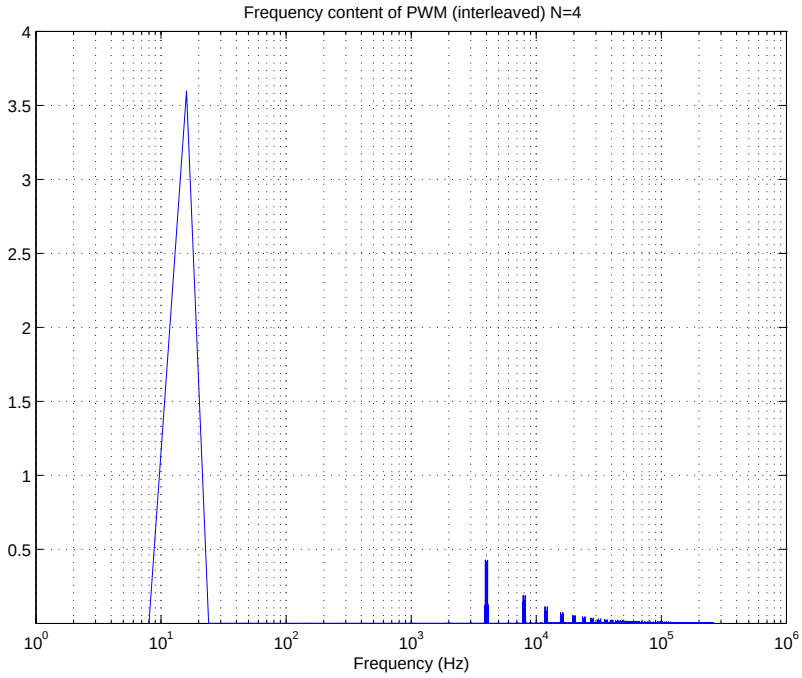

More information to interleave – also called phase shifting or occupied current interleave – can be found in [8].

2.3 Power Stage

Independent of the use of any of the above described modulation topologies the level of the single bit stream (typically at so called "logic levels", like 5 V, 3.3 V, ..) needs to be increased to a level at which the – in section 2.1.2 described typical power levels (30 V at 4 Ω) – can be reached. Figure 15 shows a typical configuration of such a power stage, where the switches shown are hardly always MOSFETs in the art, where variants with two n-channel MOSFETs exist as well as a combination of p-channel and n-channel MOSFETs.

Figure 15 Power Stage

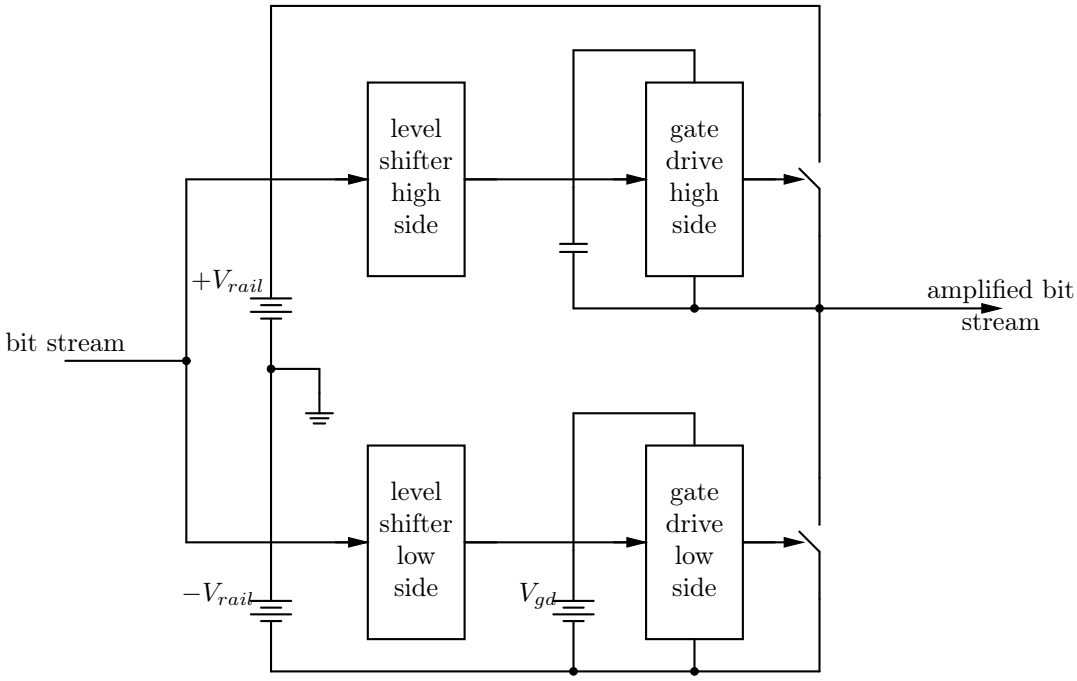

The supply voltages shown as batteries in figure 15 are usually outputs of one or more power supplies and interact directly with the performance of the audio signal. Therefore the power supply capabilities and their topologies need to be chosen very carefully.
Power stages as shown in figure 15 can be used either alone in an amplifier system, called "single ended power stage" or "half bridge power stage" as well as twice, called "bridged power stage" or "full bridge power stage" and in rather used cases multiple of them in parallel, for example to achieve higher interleave numbers.

2.3.1 Half Bridge

Figure 16 shows a single ended output configuration with a filter described in section 2.4.

Figure 16 Half bridge output configuration

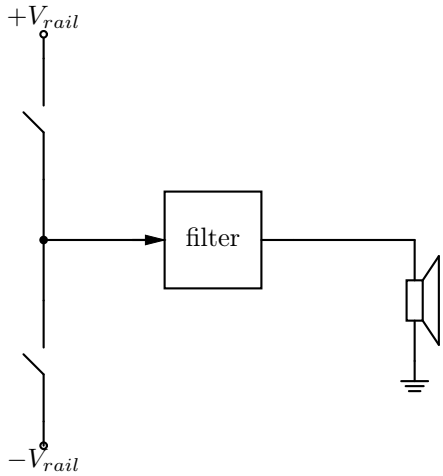

Half bridge power stages have less power devices, aquire less board or chip space, while they are capable of the undesired effect of supply voltage pumping (which is also depending on the power supply topology). A single ended output stage requires a balanced power supply and there is no possibilty known in the art to achieve the positive effects of interleave with such a power stage.

2.3.2 Full Bridge

The combination of two half bridges in the way shown in figure 16 is known as a full bridge output stage in the art.

Figure 17 Full bridge output configuration

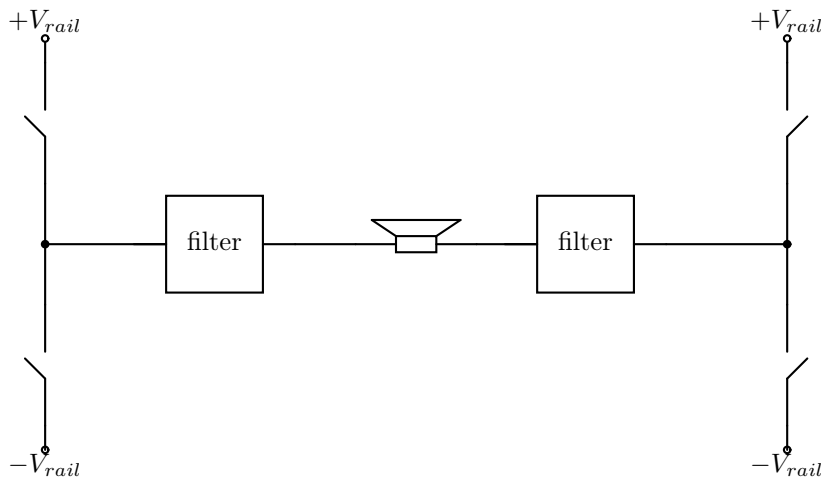

Full bridges are capable of higher power levels due to there power sharing

in more switches, can be used for interleaved applications and do not generate a back electromagnetical force into the power supplies. Those power stages can also be implemented with a single ended power supply, having half of its supply voltage as a common mode voltage on the speaker terminals referenced to the power supplys ground. However they require more board or chip space.
More than two half bridges can be used as power stages when paralleling there filter outputs. Each half bridge therefore has its own filter where there outputs form a current summing node at one of the two terminals of the transducer. Therefore theoretically infinite power levels and interleave count is possible.

2.4 Filter

As shown in section 2.2 a Class-D amplifier does not only contain the desired spectral components of the audio signal but also the highly undesired higher frequency components which are considered as EMC in applications. Those spectral components are intrinsically beyond any legal excepted level of EMC conformity and therefore need to be suppressed. It is therefore obvious to use a low pass filter at the output of a power stage to damp those perturbations to an acceptable level, while passing the audio signal without any change.
Regarding the fact that this low pass is in a place in the chain where the bitstream is already amplified and therefore contains high energy, there are several requirements to the low pass, described below:

- The energy levels driven through the filter usually never allow an active filter and none of those is known in the art.
- The filter is required to be lossless to keep the advantages of the efficiency common to all Class-D amplifiers, therefore consisting only of reactive components.
- The cut-off frequency of the filter needs to be between the highest audio frequency and the lowest switching frequency, to allow undamped passing of the audio signal and provide suppression of the high frequency material.

Therefore a lots of trade offs which arise to known in the art filter elements and switching amplifier topologies when taking the requirements above into account.

- The lower the cut off frequency should be, the bigger the capacitors and inductors in the filter are. Big values in those places cause increased parasitics within those, which have negative impact on the overall performance of the filter.
- The higher the frequency rises, the more also the traces on a board take effect.
- Undamped filters cause an overshoot in the spectral output of the amplifier while damping introduces losses.
- The materials used in the filter components – especially the cores of the inductors, as those are getting magnetized – need to be carefully chosen together with the used switches and the switching frequency (or switching frequency range) as a trade off between static and dynamic losses. Both

of those loss mechanisms can be seen in all components which are applied to high voltage or high current stress. A more detailed reflection on those choices can be found in [9].

All these considerations frequently end up in a configuration as shown in figure 18. Typically the filter consists of one inductor and one capacitor which form a cut off frequency around 50 kHz and a series of one resistor and one capacitor to damp the whole filter reasonable. Further components can be included if the legal requirements can not be reached with a simpler approach.

Figure 18 Typical output filter for a Class-D amplifier

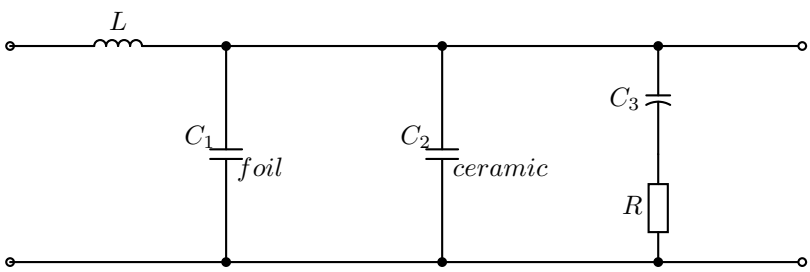

L is usually a wounded inductor at the size between 10 µH and 40 µH forming the pole together with C_1 which is at a size between 100 µF and 500 µF. As these kinds of capacitors have there resonancy below the highest frequency of interest from an EMC perspective, a parallel ceramic capacitor C_2 is added to damp the higher frequencies well below the limits. In most applications the parasitic series resistances of those three elements are not high enough to damp the resulting resonancy. To achieve damping only at frequencies where serious overswings of the filter may occur and to prevent losses below these frequencies, a capacitor C_3 at the size of a couple 100 nF is connected in series to the parallel damping resistor at the size of a couple Ω.

2.5 Feedback

Due to lack of perfection in the above described signal chain, a negative feedback of the output signal for summation to the input by the error amplifier is highly recommended. Some of those error sources are

- delay times in comparator, level shifter, gate drive and switches,
- finite rise and fall times of the signal edges due to finite gain-bandwidth products in components,
- nonlinearities in all of the above components and the output filter,
- power supply perturbations,
- varying component characteristics with temperature and humidity as well as varying operation points (due to the large signal nature of an amplifier)

2.5.1 High Frequency Feedback

This kind of feedback is taken before the filter and therefore includes high amounts of high frequency energy. Due to the multiplying nature of the comparator in the signal chain, those high frequencies can be added and subtracted therefore generating spurious tones in the audio band.
A reasonable complete amplifier simulation is shown in figure 19. This model assumes a power supply with infinite output power and no alternating voltage overlayed to its constant voltage. The switches are not real devices but ideal switches and therefore do not introduce further nonlinearities caused by the body diode of MOSFETs, their drain-source resistance when turned on and no parasitic capacitors delaying timing. The core of the inductor is assumed to be ideal and the transducer is considered to be an ohmic load instead of a real and imaginary part of an impedance as it shows up in reality. The reference for the fixed frequency amplifier is generated by an ideal and linear triangle source.

Figure 19 Open loop model with ripple distortion fed into the error amplifier

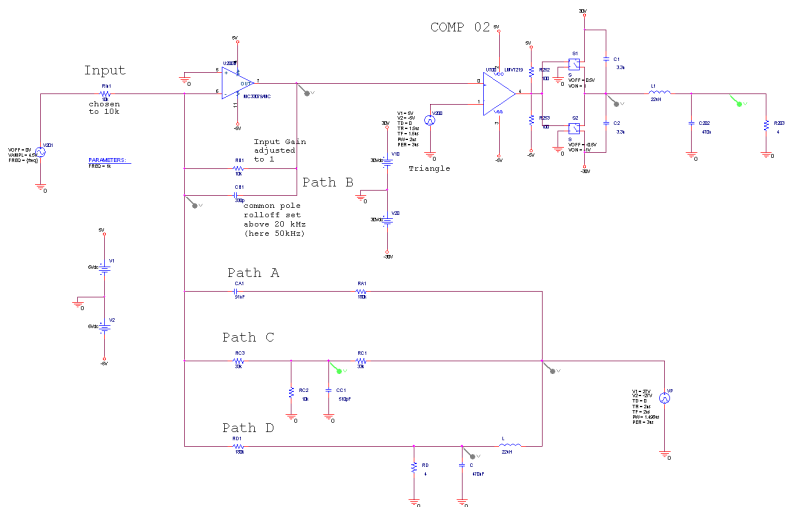

The results of the out of band introduced distortion can be seen in figure 20 especially as third harmonic distortion (which is 0.108 % here).

Figure 20 Open loop results

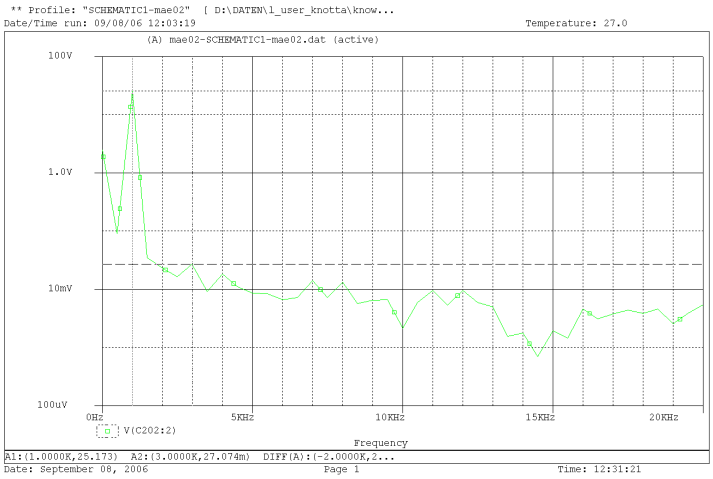

2.5.2 Low Frequency Feedback

The low frequency feedback is taken from behind the filter and therefore corrects for the nonidealities of the inductor and the capacitor. However as the filter introduces 180 ° phase shift, a feedback from that point to the input impacts the stability of the amplifier and needs to be chossen weaker than the one before the filter.
A corresponding simulation model with feedback to the one shown in section 2.5.1 is shown in figure 21. The suppression of aliasing components induced from the output of the amplifer into the modulator is a similar approach like [10] and [11], however uses less components and saves therefore board or chip space.

Figure 21 Closed loop model

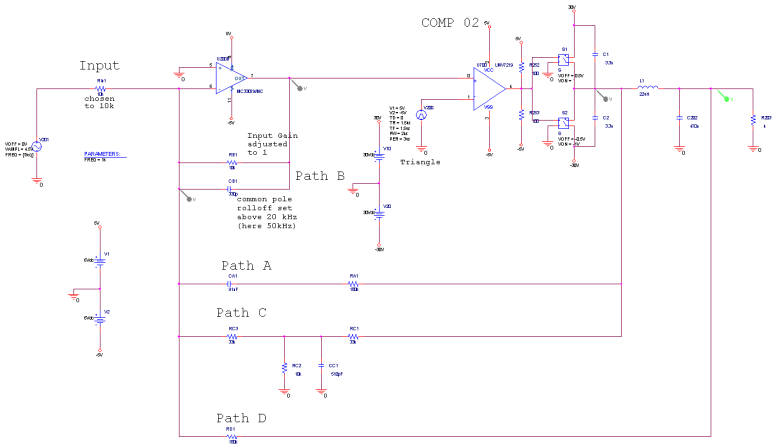

Note that the 3 kHz component in figure 22 is about −22.2 dB below the one in the open loop case.

Figure 22 Closed loop results

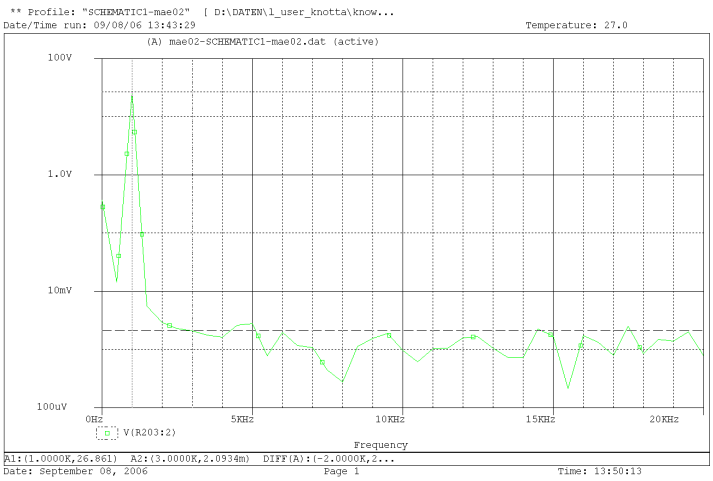

A third harmonic distortion of 0.008 % can be achieved with this approach, what is close to the undistorted simulation of the same model (0.003 %) in an open loop configuration and again below the requirement stated in 1, when neglecting the higher harmonics.

3 Summary

As seen in the introduction to switch mode amplifiers, their design is an interdisciplinary engineering task. It includes parts of

- circuitry
- power electronics
- active and passive components
- high frequency circuit design
- EMC
- control theory
- information theory
- signal theory and waveform analysis
- measurement technology
- digital technology
- programming
- microelectronics

as well as parts of

- mechanics
- acoustics
- physics
- biology
- and as soon as a product should be reated also project management and economics

Developing a switch mode amplifier has therefore a wide bandwidth of interests as well as a lot of fun enjoying perfect sound reproduction.

References

[1] `http://de.wikipedia.org/wiki/Schallleistung`, 06. December 2006.

[2] Karsten Nielsen. Pulse Edge Delay Error Correction (PEDEC)-A Novel Power Stage Error Correction Principle for Power Digital-Analog Conversion. *AES Convention, Preprint 4602*, 103, August 1997.

[3] Karsten Nielsen. Digital Pulse Modulation Amplifier (PMA) Systems Based on PEDEC Control. *AES Convention, Preprint 4942*, 106, April 1999.

[4] Thomas Frederiksen. A novel audio power amplifier topology with high efficiency and state-of-the-art performance. *AES Convention, Preprint 5197*, 109, September 2000.

[5] Elbo GmbH. "selbstschwingender digitalverstärker". *German Patent DE19838765*, 26. August 1998.

[6] Lars Risbo. Discrete-time modeling of continous-time pulse width modulator loops. *AES Convention on Efficient Audio Power Amplification*, 27th, September 2005.

[7] Ph.D. Karsten Nielsen. *Audio Power Amplifier Techniques With Energy Efficient Power Converion*. Department of Applied Electronics, Technical University of Denmark, DK-2800, Lyngby, 30. April 1998.

[8] Gerald R. Stanley, Kenneth M. Bradshaw. Precision DC-to-AC Power Conversion by Optimization of the Output Current Waveform - The Half Bridge Revisited. *IEEE Transactions on Power Electronics*, 14(2), March 1999.

[9] Robert W. Erickson, Dragan Maksimoviťc. *Fundamentals of Power Electronics*. Kluwer Academic Publishers, 101 Philip Drive, 2004.

[10] Risbo; Claus E. Neesgaard Lars. Loop filter for class d amplifiers. *US Patent US7002406*, 21. February 2006.

[11] Claus Neesgaard Lars Risbo. Pwm amplifier control loops with minimum aliasing distortion. In *120th AES Convention*, May 2006.